Panel Eco-N Flex Black 30 cm

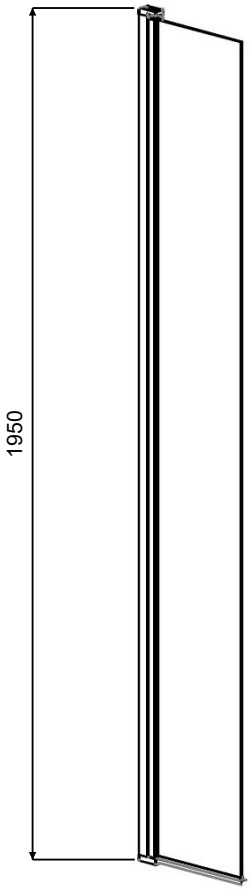



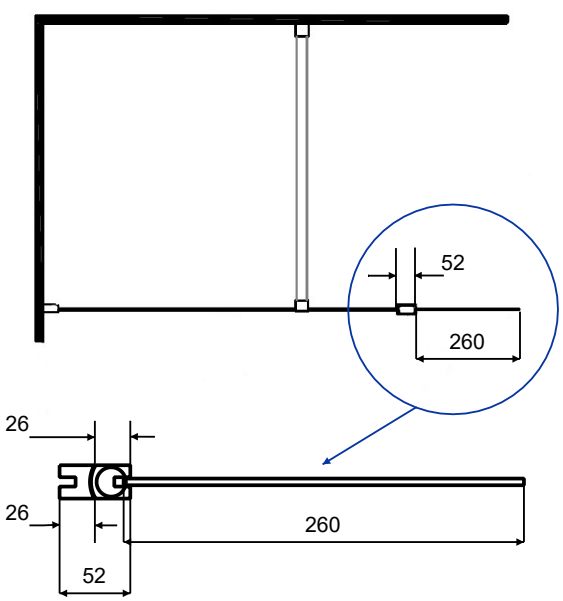

Schemat panelu Eco-N w zakresie 180°

